

ZHEJIANG ZHEGUI ELECTRIC CO,. LTD.

Address: No.316 Weishiyi Road , Yueqing City,
Zhejiang Province, China
ProvinceTel: 0577-62657695/626577696
Email address:service@giantele.com
Website: www.giant-electric.com

Giantele®

GRM-6

High voltage switchgear series



www.giant-electric.com

Product overview

- The GRM-6 gas insulated ring network switchgear adopts a modular unit mode, which can be combined according to different purposes; It consists of two main categories: fixed unit combination and expandable unit, meeting the flexible use of compact switchgear in various substations.
- The GRM-6 inflatable switchgear is a fully enclosed system, with all live parts and switches enclosed in a stainless steel casing. The entire switching device is not affected by external environmental conditions, thus ensuring operational reliability and personal safety, and achieving maintenance free. By selecting an expandable busbar, any combination can achieve full modularity. The expansion of busbar safety insulation and shielding ensures high reliability and safety.
- The GRM-6 inflatable switchgear can also provide TV-based automation solutions; The concept of intelligent switches has been formed, and the on-site installation and debugging workload has been minimized.
- The GRM-6 inflatable switchgear is divided into non expandable standard configurations and expandable standard configurations. Due to the combination of full module and half module, as well as its own scalability, it has extremely special flexibility.

Product model and meaning

G	RM	-	12	/	630	-	20
Corporate code	Gas insulated ring switchgear		Voltage level		Rated current		Breaking current

Product model and meaning

- The GRM-6 series inflatable cabinet uses SF6 gas as the arc extinguishing and insulation medium.
- The switchgear is a fully sealed and insulated structure; The busbar, switch, and live parts are completely enclosed in a stainless steel casing.
- The chamber is filled with 1.4bar SF6 gas, with a protection level of IP67. The entire switching device is completely unaffected by external environmental conditions, and can ensure normal operation of the switch even in extreme situations such as brief water immersion. The product is maintenance free for life.bination of full module and half module, as well as its own scalability, it has extremely special flexibility.
- The switchgear has a complete "five prevention" interlocking device, completely eliminating the possibility of personnel and equipment operation failures caused by human error.
- All switchgear cabinets have reliable safety pressure relief channels, which can ensure the personal safety of operators even in extreme situations.
- The switchgear is divided into two types: fixed unit combination and expandable unit combination.
- The switchgear usually has front inlet and outlet lines, and can also be installed in different positions to achieve side outlet or side expansion.
- The cabinet size is easy to install and can be suitable for places with limited space and poor environmental conditions.
- The switchgear can be equipped with electric, remote control, and detection devices according to the different needs of users.





Performance index

- **Gas pressure** 20° C is 1.4bar
  - Annual leakage rate of gas 0.2%/ year
  - Class of protection IP67
  - Air chamber stainless steel thickness 3.0mm

- **Bus bar**
  - Switchgear inside the bus 400mm2Cu
  - Switchgear ground bus 150mm2Cu

- colour
  - Switch cabinet front panel RAL 7035
  - Side panel and cable room front cover plate RAL 7035

- **Normal operating environment conditions**
  - Maximum temperature 40℃
  - Minimum temperature -40℃
  - Maximum mean relative humidity ≤95%
  - Altitude ≤2000m

- **Meet the criteria**

GB/T11022 GB3906 GB1985
GB16926 GB38041 GB1984
GB3309

IEC60056 IEC60129 IEC60256
IEC60298 IEC60420 IEC60694

Main technical parameters

Name		C module	F module	V module		CB module	
		Load switch	Combination apparatus	Vacuum switch	Isolation/ ground switch	Direct-air circuit breaker	Isolation/ ground switch
Rated voltage	KV	12	12	12	12	12	12
Rated frequency	HZ	50	50	50	50	50	50
Power frequency withstand voltage (same/fracture)	kV	42/48	42/48	42/48	42/48	42/48	42/48
Aegis; Knock withstand voltage	kV	75/85	75/85	75/85	75/85	75/85	75/85
Rated current	A	630	注	630		1250/630	
Breaking capacity							
Rated closed-loop breaking current	A	630					
Rated cable charging breaking current	A	10					
Rated short circuit closing current (peak)	A	50	80				
Rated peak withstand current	kA	50					
Rated short-time withstand current	kA/3S	20					
Rated short-circuit breaking current	kA		31.5	20		25	
Rated transfer current	A		1700				
Rated transfer current	A		125				
Loop resistance	-n	≤300	≤600				
Mechanical life	次	5000	3000	5000	2000	5000	5000

Infrastructure diagram

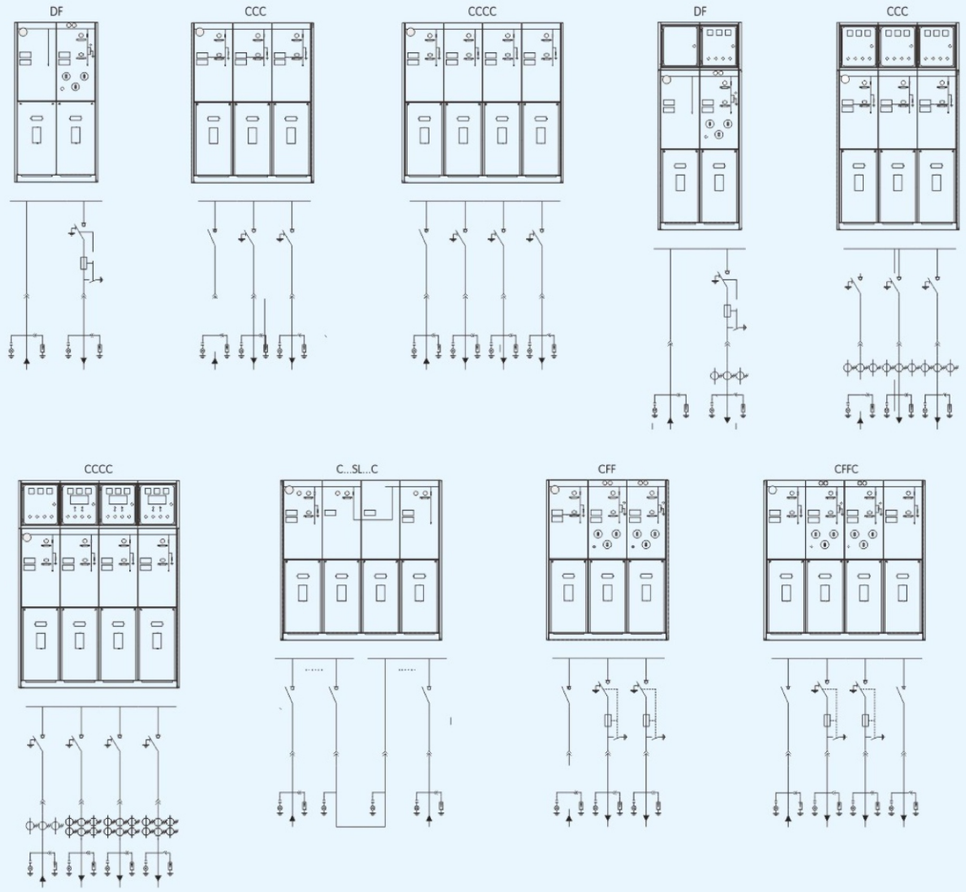

Infrastructure diagram

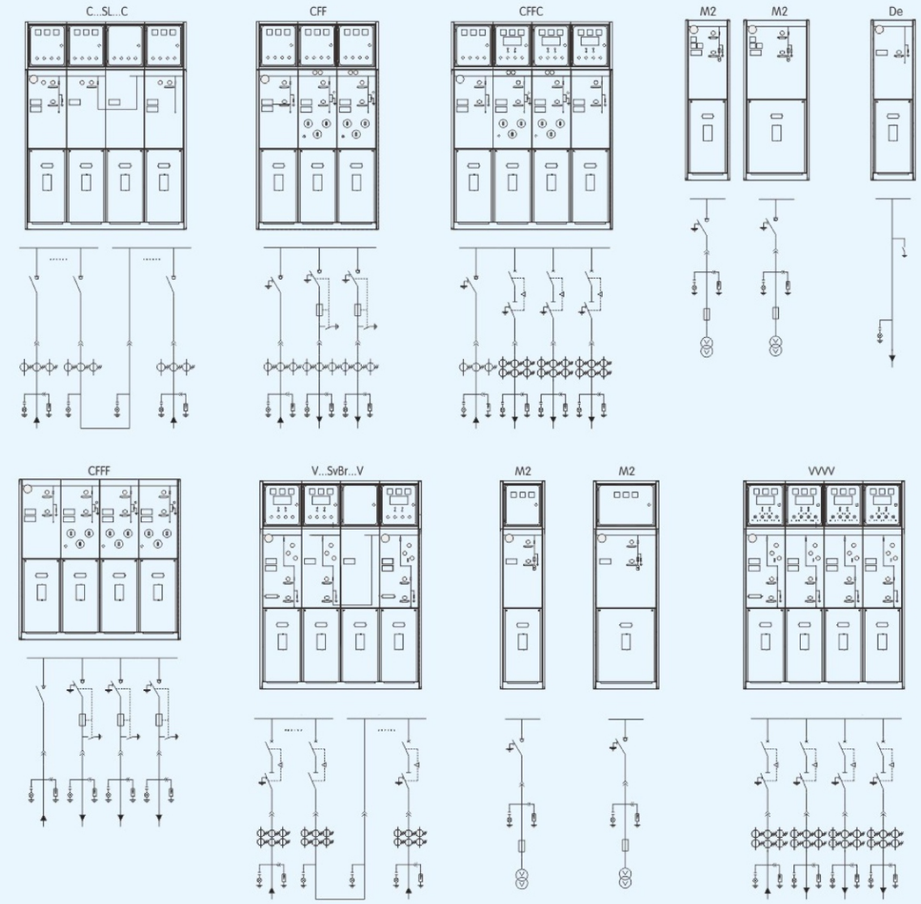

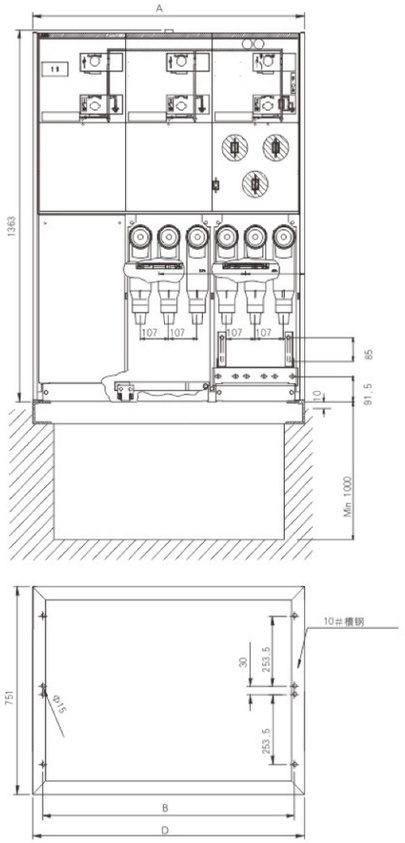

Top view of foundation channel steel

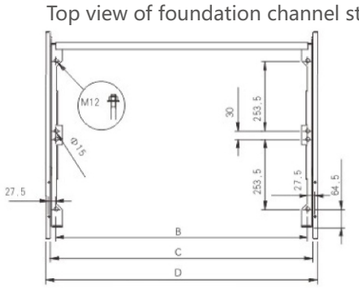

Support bottom floor map

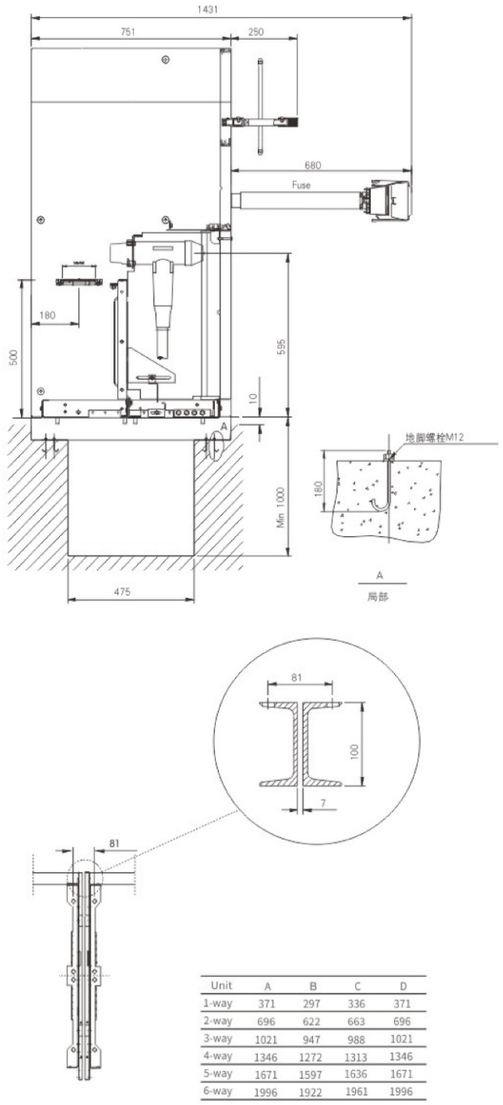

Unit	A	B	C	D
1-way	371	297	336	371
2-way	696	622	663	696
3-way	1021	947	988	1021
4-way	1346	1272	1313	1346
5-way	1671	1597	1636	1671
6-way	1996	1922	1961	1996

Expansion module connection diagram

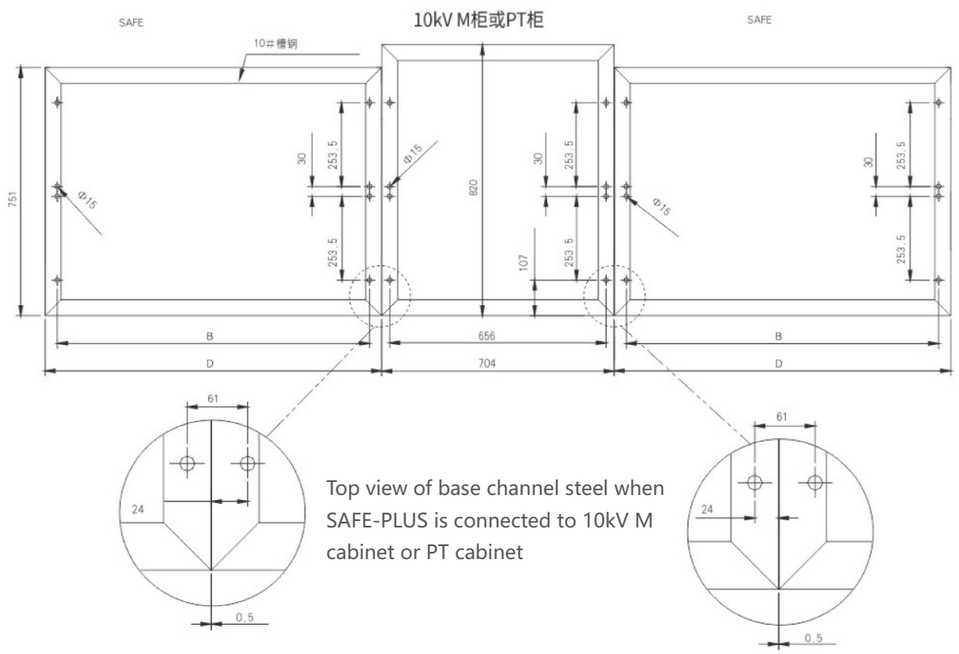

Top view of base channel steel when SAFE-PLUS is connected to 10kV M cabinet or PT cabinet

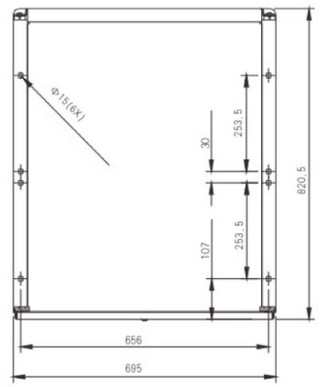

10kV M or PT cabinet bottom plate installation diagram
Foundation drawing when expansion module is connected to 10kV M cabinet or PT cabinet

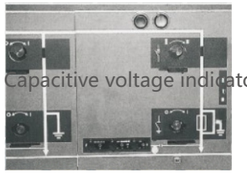

Capacitive voltage indicator

Auxiliary contact

2NO+2NC indicating switch position is available on all load switches and circuit breakers. A parallel trip coil AC or DC)(can be installed to the transformer switch/circuit breaker. The low pressure control unit is located behind the front panel.

Voltage indication

The capacitive voltage indicator shows whether the bushing is charged and the jack on it can be used for the nuclear phase.



Cable connection

Short circuit/ground fault indicator

To facilitate fault location, cable switch modules can be equipped with short circuit/ground fault indicators for simple fault detection.

Electric operation

Manual operation of the cable switch unit and transformer unit is the standard scheme. Optionally, an electric operating mechanism can be installed. Cable switches, vacuum circuit breakers and ground switches are all operated through structures located behind the front panel. For all switches and circuit breakers, they can be operated by an operating handle (standard) or they can be equipped with a motor operating structure (accessories). However, the ground switch can only be operated manually and is equipped with a mechanism capable of meeting the fault current. The electric operating mechanism is easy to implement in stages.

Cable connection

GRM-6 inflatable cabinet is fitted with standard bushing. All bushings are at the same height from the ground and are protected by a cable room cover. The cover plate can be interlocked with the ground switch, and for double cable entry, a special double cable room cover plate can also be used.



Pressure indicator

Pressure indicator

Usually equipped with a pressure indicator, the indicator is in the form of a pressure gauge. Electrical contacts can also be provided to indicate pressure reduction.

TEST REPORT

C/F/V Cabinet



